KALFIRE
FIREPLACES

G160-41F

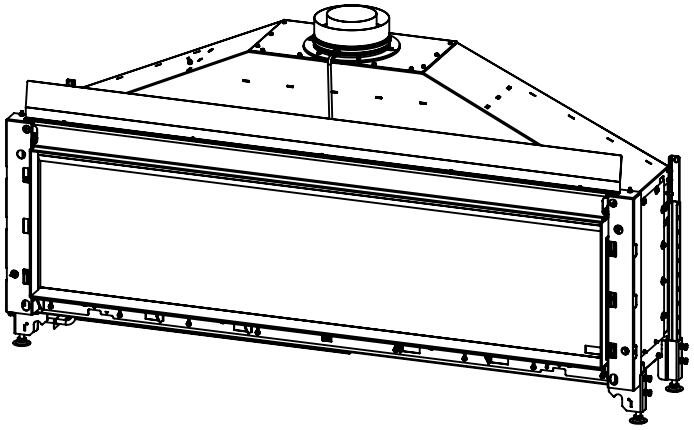

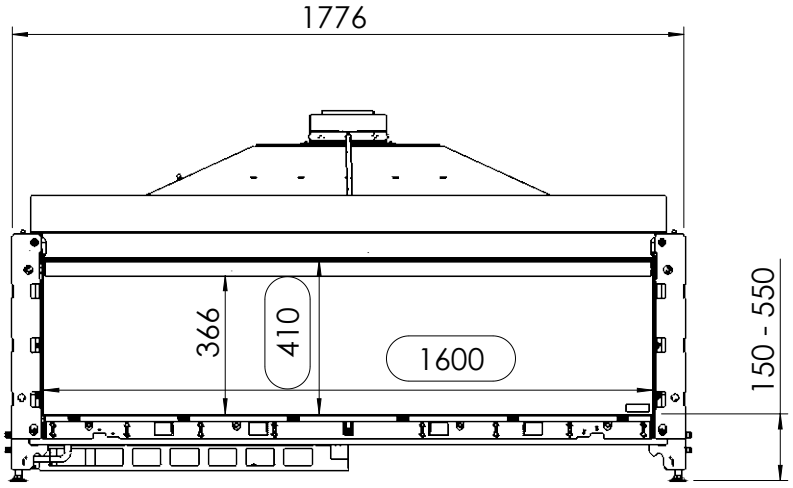

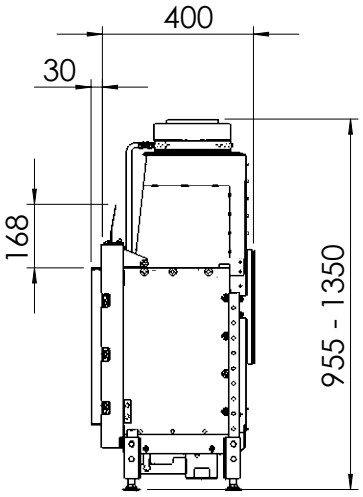

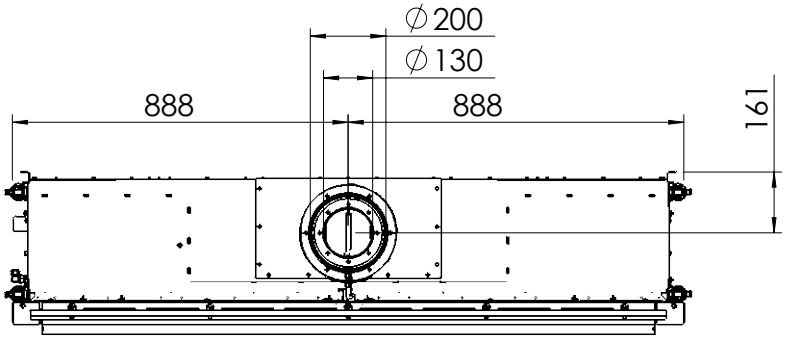

All dimensions in mm. Modifications under reserve. 21-7-2016 sheet 1 / 3

© All rights reserved. This drawing is sole property of Kal-fire. No part of this drawing may be reproduced, or published, in any form or in any way without prior written permission from Kal-fire.

KALFIRE
FIREPLACES

G160-41F

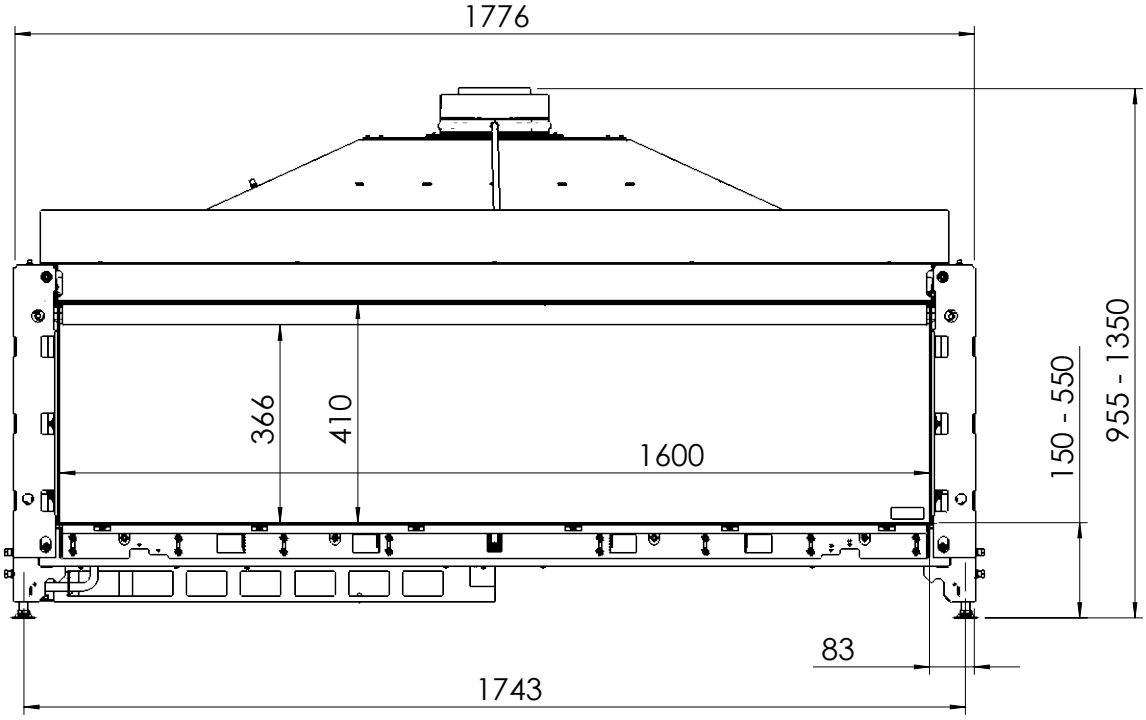

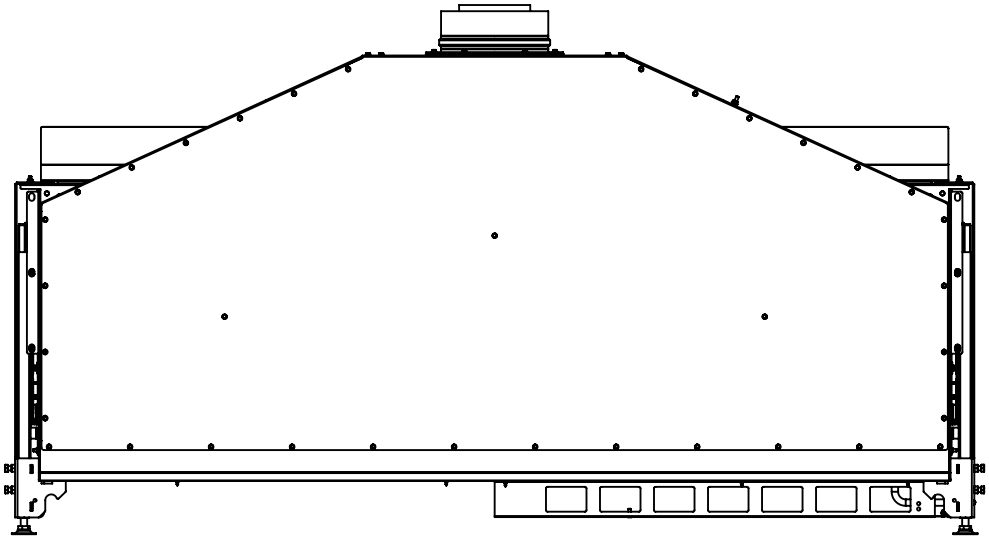

© All rights reserved. This drawing is sole property of Kal-fire. No part of this drawing may be reproduced, or published, in any form or in any way without prior written permission from Kal-fire.

KALFIRE
FIREPLACES

G160-41F

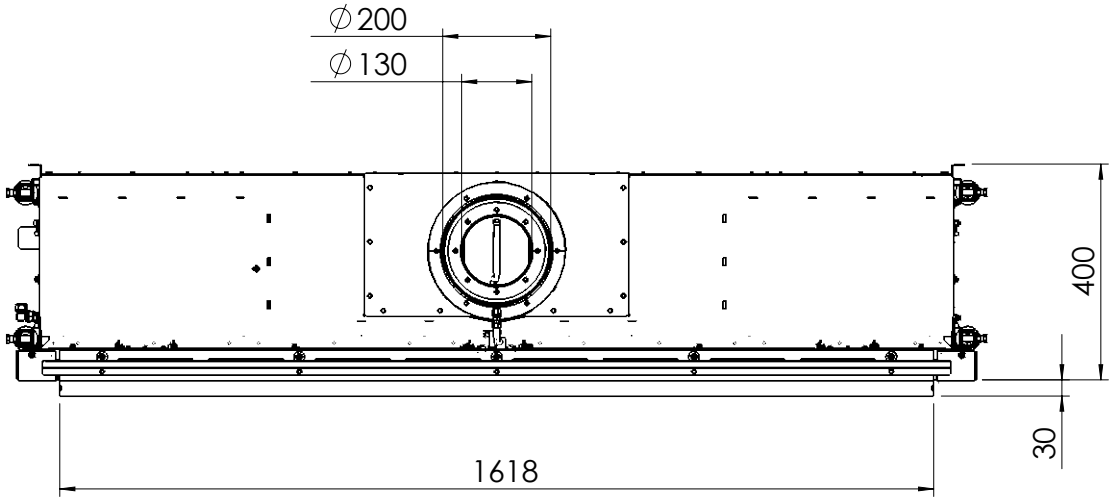

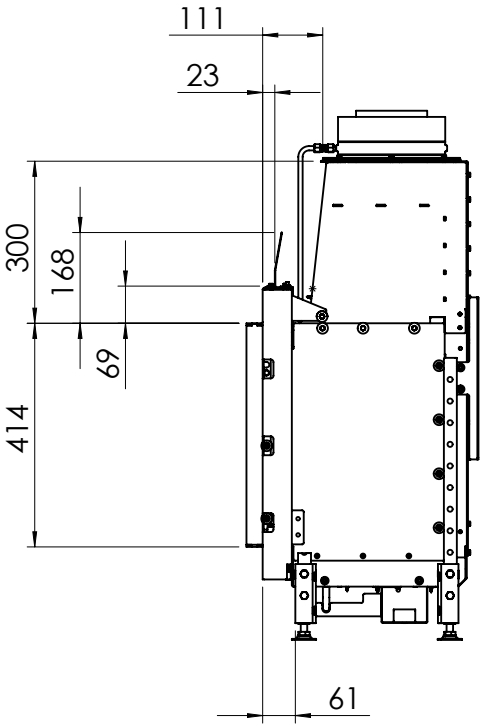

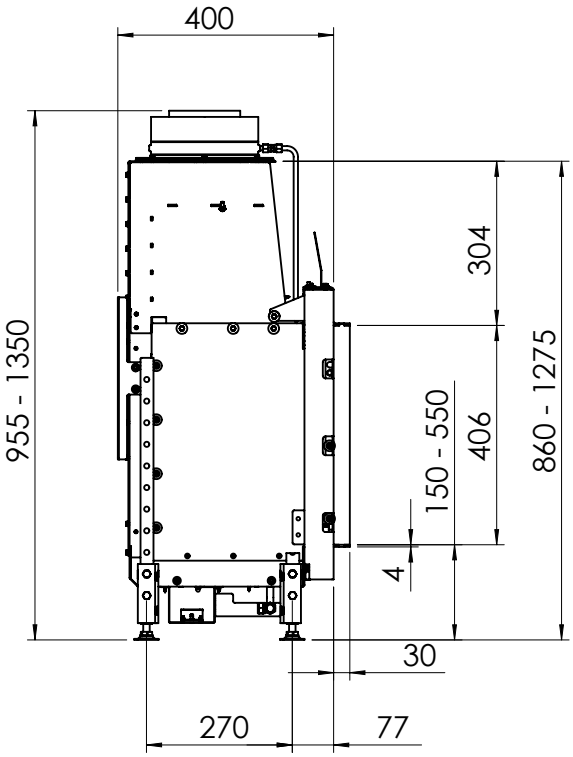

All dimensions in mm. Modifications under reserve.

21-7-2016 sheet 3 / 3

© All rights reserved. This drawing is sole property of Kal-fire. No part of this drawing may be reproduced, or published, in any form or in any way without prior written permission from Kal-fire.